Dept / Qty	
DC	1
ED	1
IE	1
ISO	1
PD	1
R&D	1
SD	1
QA	1
QC	1
QE	1

The information provided herein is from CONNFLY Electronic Co., Ltd. and is confidential. Any disclosure to a party other than the recipient is prohibited. The intellectual properties and its rights contained herein, including but not limited to, trademarks, patents, copyrights, trade secrets, and technical know-how, are owned exclusively by CONNFLY or its affiliates. Unauthorized use or modification is strictly prohibited without prior written consent from CONNFLY. All intellectual properties provided herein are for reference purposes only and does not constitute authorization of its use in any format or manner. CONNFLY may enforce its intellectual property rights at its own discretion; failures or delays to exercise such rights does not constitute a waiver of such rights.

REV.	DESCRIPTION	DRAWN	CHECKED	APPROVED
A	NEW RELEASE	JLZ 04/09/15'		
B	DRAWING UPDATE	JLZ 04/21/25'		

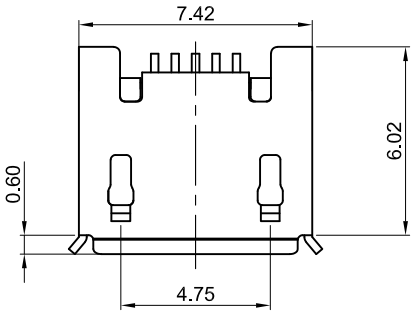

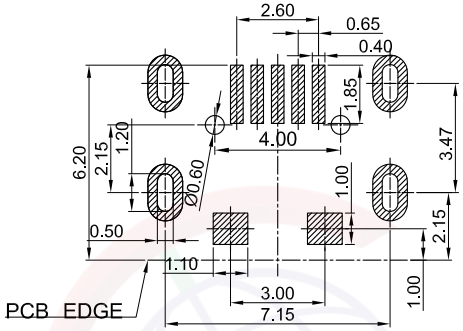

Recommend PCB layout
(Tolerance:±0.05)

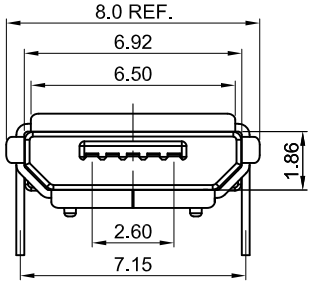

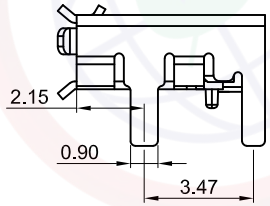

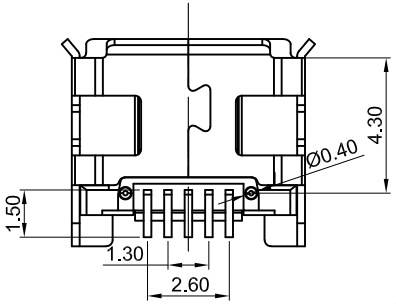

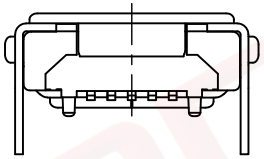

(Series Image-Reference Only)

Notes:

Specifications:
1. Contact Resistance: 30mΩ Max.
2. Insulation Resistance: 100MΩ Min.
3. Dielectric Withstanding Voltage: 100V AC(rms) For 1 Minute.
4. Current Rating:1.8A Max(Pin1#&5#)
5. Voltage Rating:30V Max
6. Temperature: -30°C~+80°C.

Materials:
1. Contact Material: Copper Alloy.
2. Shell Material: Stainless Steel.
3. Insulator Material: Thermoplastic,Black.

Mechanical Characteristics:
1. Mating Force:3.57Kgf Maximum.
2. Unmating Force:1.02Kgf Minimum.
3. Durability:3000 Cycles

Product Number Code:

DS1105-07 - X X X X X

- Packing type:
  R: Tape on reel
- Post support:
  S: W/ Post
  X: W/O Post
- Contact plated:
  0: Full gold flash
  C: 3u" gold
- Shell Plated:
  N: Nickel
  6: Tin
- Color of housing:
  B: Black

GENERAL TOLERANCE		ANGLE TOLERANCE	
X.	±0.60	X.	±5°
.X	±0.38	.X	±3°
.XX	±0.25	.XX	±2°

DRAWING TYPE	CUSTOMER		
SCALE	1:1	SHEET	1 OF 1
DRAWING NO.	C-DS1105-07-XXXXXX-B		

PROJECTION		TITLE	Micro USB B Type Female 5P DIP+R/A SMT W/ Post Type
UNITS	mm		
SHEET SIZE	A4	SERIES	DS1105-07 SERIES

晨翔电子有限公司
CONNFLY CONNFLY ELECTRONIC CO. LTD