Dept / Qty	
DC	1
ED	1
IE	1
ISO	1
PD	1
R&D	1
SD	1
QA	1
QC	1
QE	1

The information provided herein is from CONNFLY Electronic Co., Ltd. and is confidential. Any disclosure to a party other than the recipient is prohibited. The intellectual properties and its rights contained herein, including but not limited to, trademarks, patents, copyrights, trade secrets, and technical know-how, are owned exclusively by CONNFLY or its affiliates. Unauthorized use or modification is strictly prohibited without prior written consent from CONNFLY. All intellectual properties provided herein are for reference purposes only and does not constitute authorization of its use in any format or manner. CONNFLY may enforce its intellectual property rights at its own discretion; failures or delays to exercise such rights does not constitute a waiver of such rights.

Male

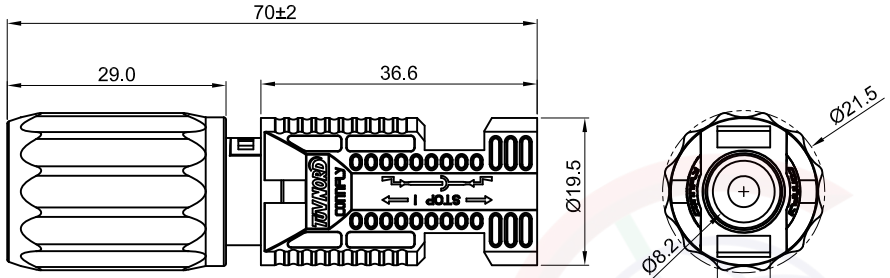

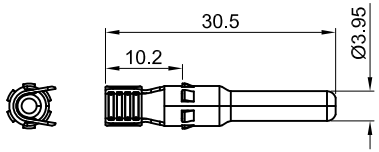

Male Contact

Female

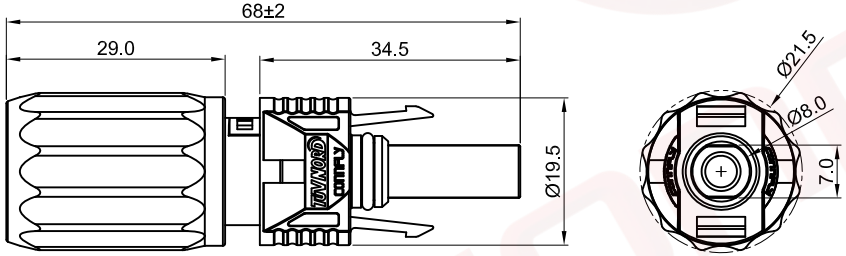

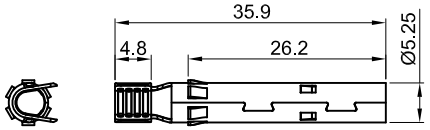

Female Contact

(Series Image-Reference Only)

REV.	DESCRIPTION	DRAWN	CHECKED	APPROVED
A	NEW RELEASE	JLZ 05/06/22'		
B	DRAWING UPDATE	JLZ 09/24/24'		

Notes:

Specifications:

1. Contact Resistance: 0.5mΩ Max.
2. Insulation Resistance: 1000MΩ Min.
3. Dielectric Withstanding Voltage: 8000V AC(rms) For 1 Minute.
4. Current Rating: 30A.
5. Voltage Rating: 1500V DC rms.
6. Temperature: -40°C~+85°C.
7. Cable size: 2.5~6mm².
8. Waterproof rated: IP67.

Materials:

1. Insulating material: Thermoplastic,UL 94 V-0.
2. Contact: Red Copper,Tin plated.
3. Fingers: Berryllium Copper, Tin Plated.
4. Clip: Stainless Steel.
5. Sealing: Silicone rubber,Black.

Product Number Code:

DS1162-01 – X X X X X X

- Voltage Type
  1: 1500V
- Packing Type
  1: Mix packing(Female+Male/Bag)
  2: Separation packing(Female/Bag or Male/Bag)
  Q:N*Female/Bag+N*Male/Bag+N*Male Contact/Bag +Female Contact/Bag
- Housing color
  B: Black
- Contact plating
  6: Tin
- Mounting type
  C: Locking type
- Connector type
  F: Female M: Male
  A: Female+Male

GENERAL TOLERANCE		ANGLE TOLERANCE	
X.	±0.60	X.	±5°
.X	±0.38	.X	±3°
.XX	±0.25	.XX	±2°

DRAWING TYPE	CUSTOMER		
SCALE	1:1	SHEET	1 OF 5
DRAWING NO.	C-DS1162-01-XXXXX-B		

PROJECTION		TITLE	Solar Connectors Wire to Wire W/ Lock Type (1500V)
UNITS	mm		
SHEET SIZE	A4	SERIES	DS1162-01 SERIES

晨翔电子有限公司

CONNFLY ELECTRONIC CO. LTD

Dept / Qty	
DC	1
ED	1
IE	1
ISO	1
PD	1
R&D	1
SD	1
QA	1
QC	1
QE	1

The information provided herein is from CONNFLY Electronic Co., Ltd. and is confidential. Any disclosure to a party other than the recipient is prohibited. The intellectual properties and its rights contained herein, including but not limited to, trademarks, patents, copyrights, trade secrets, and technical know-how, are owned exclusively by CONNFLY or its affiliates. Unauthorized use or modification is strictly prohibited without prior written consent from CONNFLY. All intellectual properties provided herein are for reference purposes only and does not constitute authorization of its use in any format or manner. CONNFLY may enforce its intellectual property rights at its own discretion; failures or delays to exercise such rights does not constitute a waiver of such rights.

Male

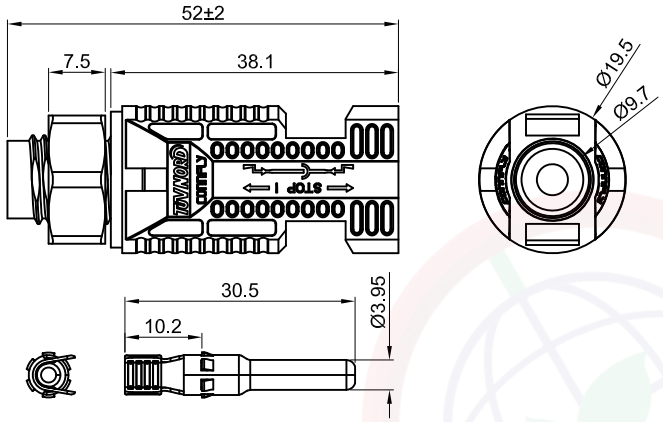

Male Contact

Female

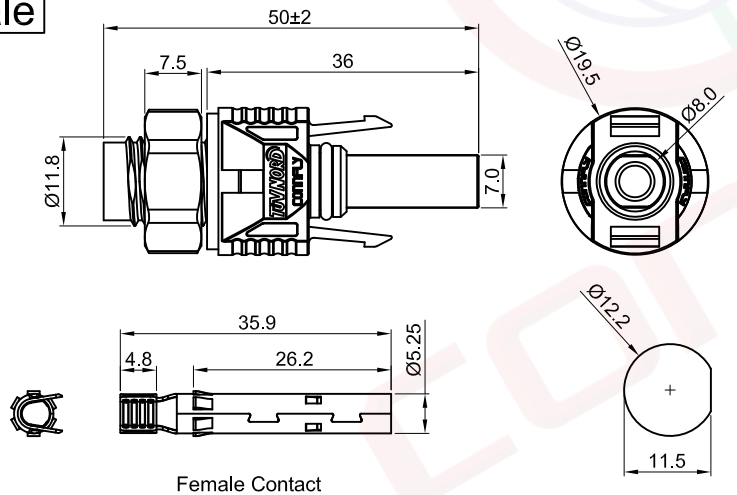

Female Contact

Suggested Panel Opening

(Series Image-Reference Only)

REV.	DESCRIPTION	DRAWN	CHECKED	APPROVED
A	NEW RELEASE	JLZ 05/06/22'		
B	DRAWING UPDATE	JLZ 09/24/24'		

Notes:

Specifications:

1. Contact Resistance: 0.5mΩ Max.
2. Insulation Resistance: 1000MΩ Min.
3. Dielectric Withstanding Voltage: 8000V AC(rms) For 1 Minute.
4. Current Rating: 30A.
5. Voltage Rating: 1500V DC rms.
6. Temperature: -40°C~+85°C.
7. Cable size: 2.5~6mm².
8. Waterproof rated: IP67.

Materials:

1. Insulating material: Thermoplastic,UL 94 V-0.
2. Contact: Red Copper,Tin plated.
3. Fingers: Berryllium Copper, Tin Plated.
4. Clip: Stainless Steel.
5. Sealing: Silicone rubber,Black.

Product Number Code:

DS1162-01 – X X X X X X

- Voltage Type
  1: 1500V
- Packing Type
  1: Mix packing(Female+Male/Bag)
  2: Separation packing(Female/Bag or Male/Bag)
  Q:N*Female/Bag+N*Male/Bag+N*Male Contact/Bag +Female Contact/Bag
- Housing color
  B: Black
- Contact plating
  6: Tin
- Mounting type
  V: Panel type
- Connector type
  F: Female M: Male
  A: Female+Male

GENERAL TOLERANCE		ANGLE TOLERANCE	
X.	±0.60	X.	±5°
.X	±0.38	.X	±3°
.XX	±0.25	.XX	±2°

DRAWING TYPE	CUSTOMER		
SCALE	1:1	SHEET	2 OF 5
DRAWING NO.	C-DS1162-01-XXXXX-B		

PROJECTION		TITLE	Solar Connectors Wire to Board W/ Lock Type (1500V)
UNITS	mm		
SHEET SIZE	A4	SERIES	DS1162-01 SERIES

晨翔电子有限公司

CONNFLY ELECTRONIC CO. LTD

Dept / Qty	
DC	1
ED	1
IE	1
ISO	1
PD	1
R&D	1
SD	1
QA	1
QC	1
QE	1

The information provided herein is from CONNFLY Electronic Co., Ltd. and is confidential. Any disclosure to a party other than the recipient is prohibited. The intellectual properties and its rights contained herein, including but not limited to, trademarks, patents, copyrights, trade secrets, and technical know-how, are owned exclusively by CONNFLY or its affiliates. Unauthorized use or modification is strictly prohibited without prior written consent from CONNFLY. All intellectual properties provided herein are for reference purposes only and does not constitute authorization of its use in any format or manner. CONNFLY may enforce its intellectual property rights at its own discretion; failures or delays to exercise such rights does not constitute a waiver of such rights.

Male

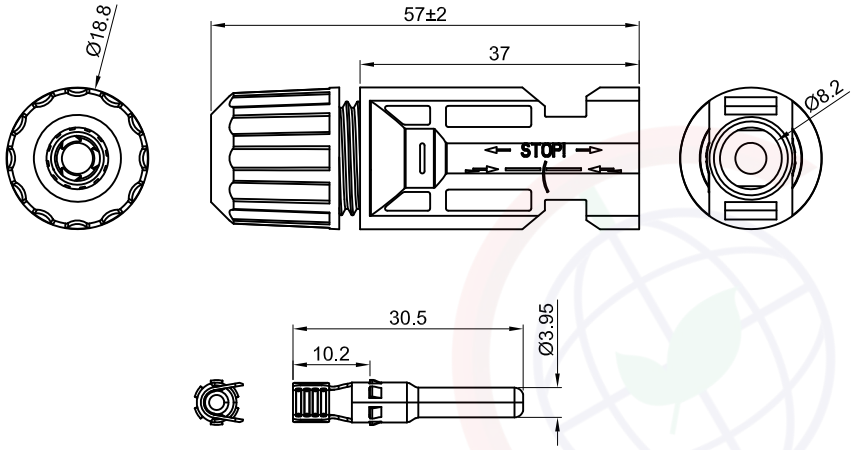

Male Contact

Female

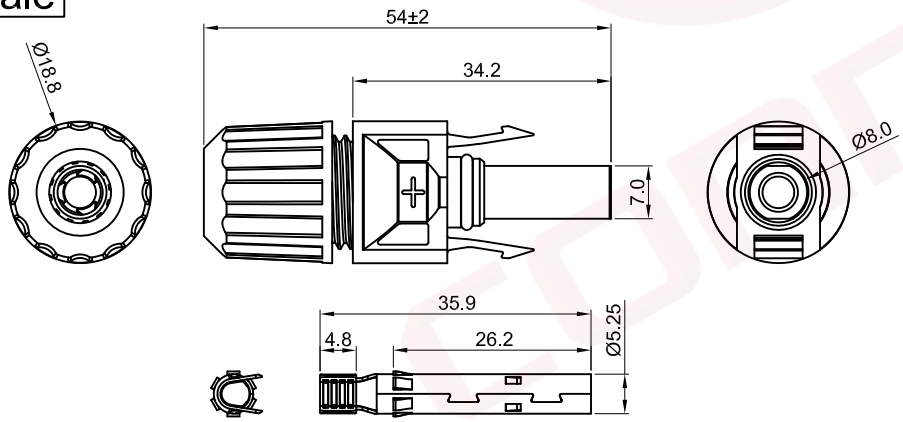

Female Contact

(Series Image-Reference Only)

REV.	DESCRIPTION	DRAWN	CHECKED	APPROVED
A	NEW RELEASE	JLZ 05/06/22'		
B	DRAWING UPDATE	JLZ 09/24/24'		

Notes:

Specifications:

1. Contact Resistance: 0.5mΩ Max.
2. Insulation Resistance: 1000MΩ Min.
3. Dielectric Withstanding Voltage: 2000V AC(rms) For 1 Minute.
4. Current Rating: 30A.
5. Voltage Rating: 1000V DC rms.
6. Temperature: -40°C~+85°C.
7. Cable size: 2.5~6mm².
8. Waterproof rated: IP67.

Materials:

1. Insulating material: Thermoplastic,UL 94 V-0.
2. Contact: Red Copper,Tin plated.
3. Fingers: Berryllium Copper, Tin Plated.
4. Clip: Stainless Steel.
5. Sealing: Silicone rubber,White&Red.

Product Number Code:

DS1162-01 – X X X X X X

- Voltage Type
  2: 1000V
- Packing Type
  1: Mix packing(Female+Male/Bag)
  2: Separation packing(Female/Bag or Male/Bag)
  Q:N*Female/Bag+N*Male/Bag+N*Male Contact/Bag +Female Contact/Bag
- Housing color
  B: Black
- Contact plating
  6: Tin
- Mounting type
  C: Locking type
- Connector type
  F: Female M: Male
  A: Female+Male

GENERAL TOLERANCE		ANGLE TOLERANCE	
X.	±0.60	X.	±5°
.X	±0.38	.X	±3°
.XX	±0.25	.XX	±2°

DRAWING TYPE	CUSTOMER		
SCALE	1:1	SHEET	3 OF 5
DRAWING NO.	C-DS1162-01-XXXXX-B		

PROJECTION		TITLE	Solar Connectors Wire to Wire W/ Lock Type (1000V)
UNITS	mm		
SHEET SIZE	A4	SERIES	DS1162-01 SERIES

晨翔电子有限公司

CONNFLY CONNFLY ELECTRONIC CO. LTD

Dept	Qty
DC	1
ED	1
IE	1
ISO	1
PD	1
R&D	1
SD	1
QA	1
QC	1
QE	1

The information provided herein is from CONNFLY Electronic Co., Ltd. and is confidential. Any disclosure to a party other than the recipient is prohibited. The intellectual properties and its rights contained herein, including but not limited to, trademarks, patents, copyrights, trade secrets, and technical know-how, are owned exclusively by CONNFLY or its affiliates. Unauthorized use or modification is strictly prohibited without prior written consent from CONNFLY. All intellectual properties provided herein are for reference purposes only and does not constitute authorization of its use in any format or manner. CONNFLY may enforce its intellectual property rights at its own discretion; failures or delays to exercise such rights does not constitute a waiver of such rights.

Male

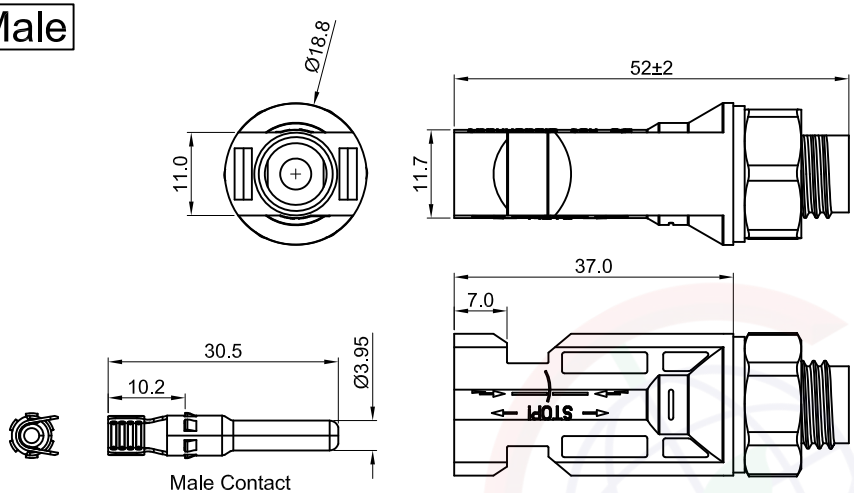

Female

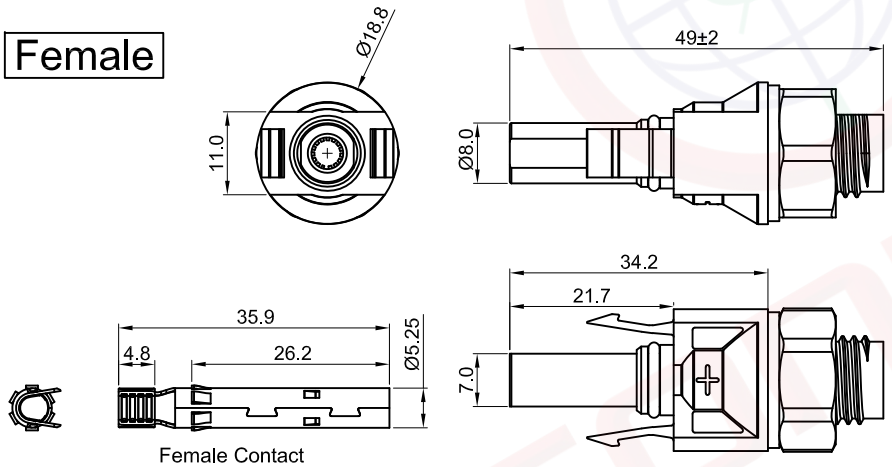

REV.	DESCRIPTION	DRAWN	CHECKED	APPROVED
A	NEW RELEASE	JLZ 05/06/22'		
B	DRAWING UPDATE	JLZ 09/24/24'		

Notes:

Specifications:

1. Contact Resistance: 0.5mΩ Max.
2. Insulation Resistance: 1000MΩ Min.
3. Dielectric Withstanding Voltage: 3000V AC(rms) For 1 Minute.
4. Current Rating: 30A.
5. Voltage Rating: 1000V DC rms.
6. Temperature: -40°C~+85°C.
7. Cable size: 2.5~6mm².
8. Waterproof rated: IP67.

Materials:

1. Insulating material: Thermoplastic,UL 94 V-0.
2. Contact: Red Copper,Tin plated.
3. Fingers: Berryllium Copper, Tin Plated.
4. Clip: Stainless Steel.
5. Sealing: Silicone rubber,White&Red.

Product Number Code:

DS1162-01 – X X X X X X

- Voltage Type
  2: 1000V
- Packing Type
  1: Mix packing(Female+Male/Bag)
  2: Separation packing(Female/Bag or Male/Bag)
  Q:N*Female/Bag+N*Male/Bag+N*Male Contact/Bag +Female Contact/Bag
- Housing color
  B: Black
- Contact plating
  6: Tin
- Mounting type
  V: Panel type
- Connector type
  F: Female M: Male
  A: Female+Male

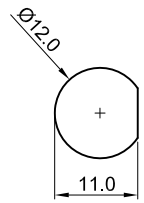

Suggested Panel Opening

(Series Image-Reference Only)

GENERAL TOLERANCE		ANGLE TOLERANCE	
X.	±0.60	X.	±5°
.X	±0.38	.X	±3°
.XX	±0.25	.XX	±2°

DRAWING TYPE	CUSTOMER		
SCALE	1:1	SHEET	4 OF 5
DRAWING NO.	C-DS1162-01-XXXXX-B		

PROJECTION		TITLE	Solar Connectors Wire to Board W/ Lock Type (1000V)
UNITS	mm		
SHEET SIZE	A4	SERIES	DS1162-01 SERIES

晨翔电子有限公司

CONNFLY CONNFLY ELECTRONIC CO. LTD

Dept / Qty	
DC	1
ED	1
IE	1
ISO	1
PD	1
R&D	1
SD	1
QA	1
QC	1
QE	1

The information provided herein is from CONNFLY Electronic Co., Ltd. and is confidential. Any disclosure to a party other than the recipient is prohibited. The intellectual properties and its rights contained herein, including but not limited to, trademarks, patents, copyrights, trade secrets, and technical know-how, are owned exclusively by CONNFLY or its affiliates. Unauthorized use or modification is strictly prohibited without prior written consent from CONNFLY. All intellectual properties provided herein are for reference purposes only and does not constitute authorization of its use in any format or manner. CONNFLY may enforce its intellectual property rights at its own discretion; failures or delays to exercise such rights does not constitute a waiver of such rights.

Male

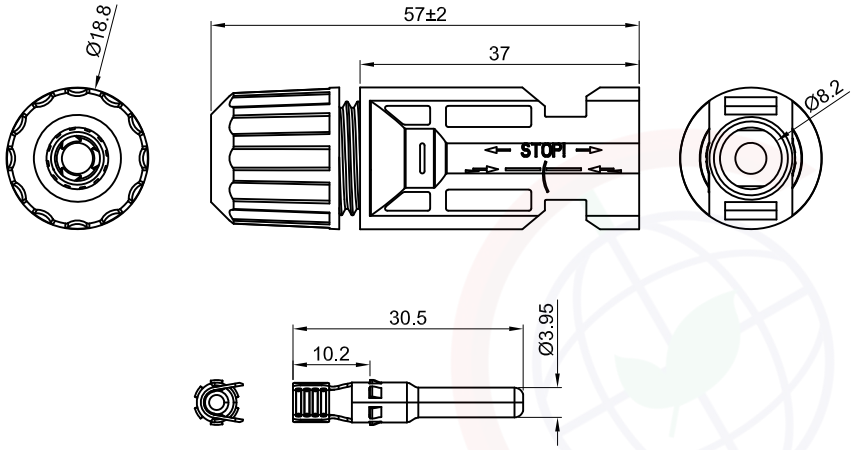

Male Contact

Female

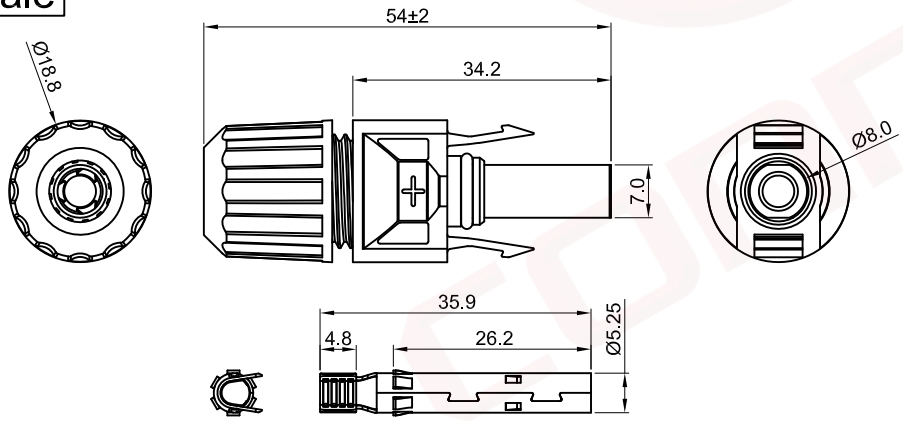

Female Contact

(Series Image-Reference Only)

REV.	DESCRIPTION	DRAWN	CHECKED	APPROVED
A	NEW RELEASE	JLZ 05/06/22'		
B	DRAWING UPDATE	JLZ 09/24/24'		

Notes:

Specifications:

1. Contact Resistance: 0.5mΩ Max.
2. Insulation Resistance: 1000MΩ Min.
3. Dielectric Withstanding Voltage: 2000V AC(rms) For 1 Minute.
4. Current Rating: 30A.
5. Voltage Rating: 1000V DC rms.
6. Temperature: -40°C~+85°C.
7. Cable size: 2.5~6mm².
8. Waterproof rated: IP67.

Materials:

1. Insulating material: Thermoplastic,UL 94 V-0.
2. Contact: Brass,Tin plated.
3. Fingers: Phosphor Bronze, Tin Plated.
4. Clip: Stainless Steel.
5. Sealing: Silicone rubber,White&Red.

Product Number Code:

DS1162-01 – X X X X X X – LT

- Voltage Type
  2: 1000V
- Packing Type
  1: Mix packing(Female+Male/Bag)
  2: Separation packing(Female/Bag or Male/Bag)
  Q:N*Female/Bag+N*Male/Bag+N*Male Contact/Bag +Female Contact/Bag
- Housing color
  B: Black
- Contact plating
  6: Tin
- Mounting type
  C: Locking type
- Connector type
  F: Female M: Male
  A: Female+Male

GENERAL TOLERANCE		ANGLE TOLERANCE	
X.	±0.60	X.	±5°
.X	±0.38	.X	±3°
.XX	±0.25	.XX	±2°

DRAWING TYPE	CUSTOMER		
SCALE	1:1	SHEET	3 OF 5
DRAWING NO.	C-DS1162-01-XXXXX-B		

PROJECTION		TITLE	Solar Connectors Wire to Wire W/ Lock Type (1000V)
UNITS	mm		
SHEET SIZE	A4	SERIES	DS1162-01 SERIES

晨翔电子有限公司

CONNFLY CONNFLY ELECTRONIC CO. LTD

Dept / Qty	
DC	1
ED	1
IE	1
ISO	1
PD	1
R&D	1
SD	1
QA	1
QC	1
QE	1

The information provided herein is from CONNFLY Electronic Co., Ltd. and is confidential. Any disclosure to a party other than the recipient is prohibited. The intellectual properties and its rights contained herein, including but not limited to, trademarks, patents, copyrights, trade secrets, and technical know-how, are owned exclusively by CONNFLY or its affiliates. Unauthorized use or modification is strictly prohibited without prior written consent from CONNFLY. All intellectual properties provided herein are for reference purposes only and does not constitute authorization of its use in any format or manner. CONNFLY may enforce its intellectual property rights at its own discretion; failures or delays to exercise such rights does not constitute a waiver of such rights.

Male

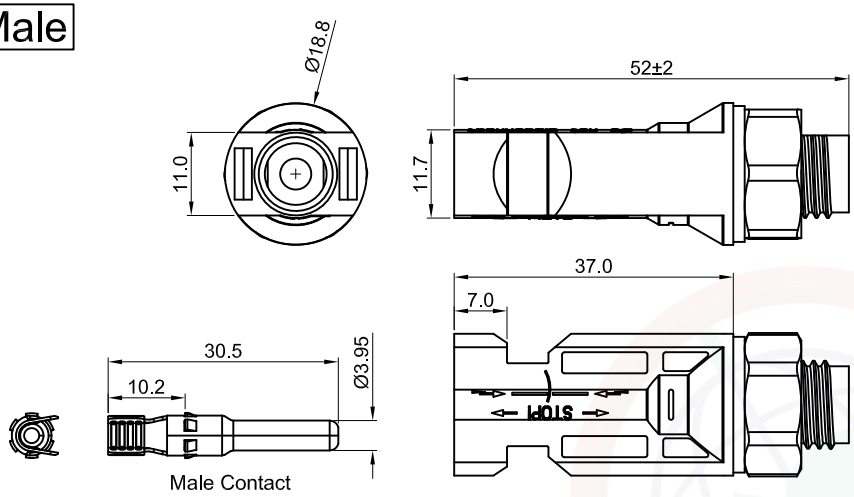

Female

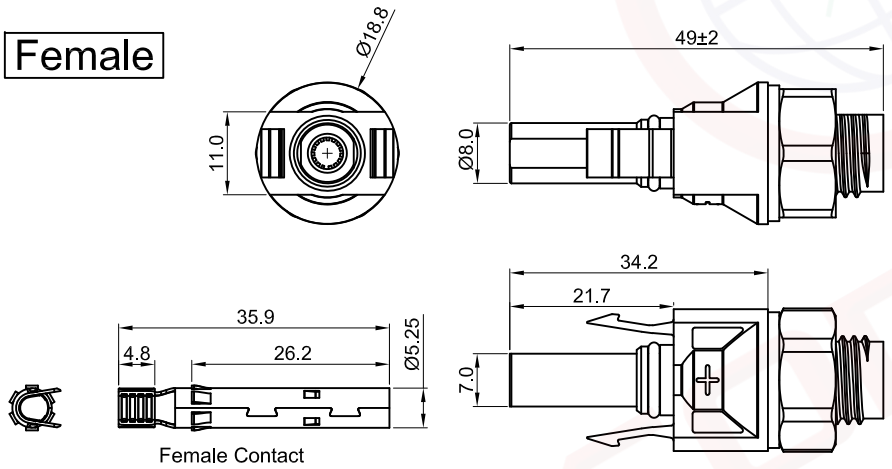

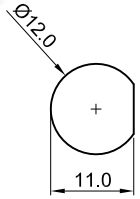

Suggested Panel Opening

REV.	DESCRIPTION	DRAWN	CHECKED	APPROVED
A	NEW RELEASE	JLZ 05/06/22'		
B	DRAWING UPDATE	JLZ 09/24/24'		

Notes:

Specifications:

1. Contact Resistance: 0.5mΩ Max.
2. Insulation Resistance: 1000MΩ Min.
3. Dielectric Withstanding Voltage: 3000V AC(rms) For 1 Minute.
4. Current Rating: 30A.
5. Voltage Rating: 1000V DC rms.
6. Temperature: -40°C~+85°C.
7. Cable size: 2.5~6mm².
8. Waterproof rated: IP67.

Materials:

1. Insulating material: Thermoplastic,UL 94 V-0.
2. Contact: Brass,Tin plated.
3. Fingers: Phosphor Bronze, Tin Plated.
4. Clip: Stainless Steel.
5. Sealing: Silicone rubber,White&Red.

Product Number Code:

DS1162-01 – X X X X X X – LT

- Voltage Type
  2: 1000V
- Packing Type
  1: Mix packing(Female+Male/Bag)
  2: Separation packing(Female/Bag or Male/Bag)
  Q:N*Female/Bag+N*Male/Bag+N*Male Contact/Bag +Female Contact/Bag
- Housing color
  B: Black
- Contact plating
  6: Tin
- Mounting type
  V: Panel type
- Connector type
  F: Female M: Male
  A: Female+Male

(Series Image-Reference Only)

GENERAL TOLERANCE		ANGLE TOLERANCE	
X.	±0.60	X.	±5°
.X	±0.38	.X	±3°
.XX	±0.25	.XX	±2°

DRAWING TYPE	CUSTOMER		
SCALE	1:1	SHEET	4 OF 5
DRAWING NO.	C-DS1162-01-XXXXX-B		

PROJECTION		TITLE	Solar Connectors Wire to Board W/ Lock Type (1000V)
UNITS	mm		
SHEET SIZE	A4	SERIES	DS1162-01 SERIES

晨翔电子有限公司

CONNFLY ELECTRONIC CO. LTD

Dept	Qty
DC	1
ED	1
IE	1
ISO	1
PD	1
R&D	1
SD	1
QA	1
QC	1
QE	1

The information provided herein is from CONNFLY Electronic Co., Ltd. and is confidential. Any disclosure to a party other than the recipient is prohibited. The intellectual properties and its rights contained herein, including but not limited to, trademarks, patents, copyrights, trade secrets, and technical know-how, are owned exclusively by CONNFLY or its affiliates. Unauthorized use or modification is strictly prohibited without prior written consent from CONNFLY. All intellectual properties provided herein are for reference purposes only and does not constitute authorization of its use in any format or manner. CONNFLY may enforce its intellectual property rights at its own discretion; failures or delays to exercise such rights does not constitute a waiver of such rights.

REV.	DESCRIPTION	DRAWN	CHECKED	APPROVED
A	NEW RELEASE	JLZ 09/24/23'		
B	DRAWING UPDATE	JLZ 09/28/24'		

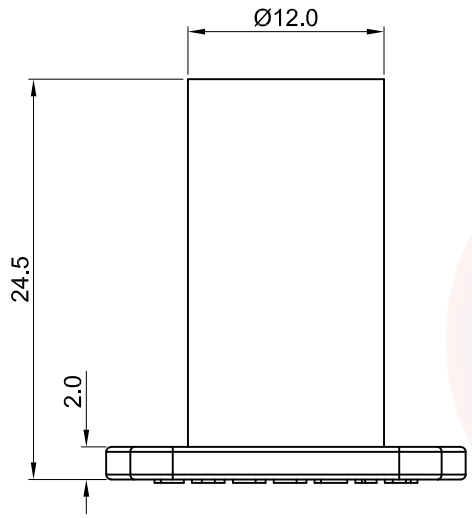

Socket

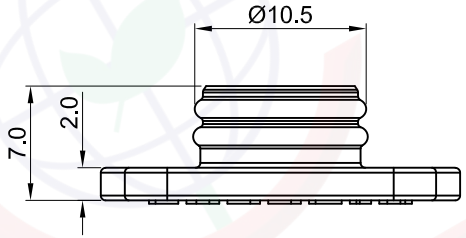

Plug

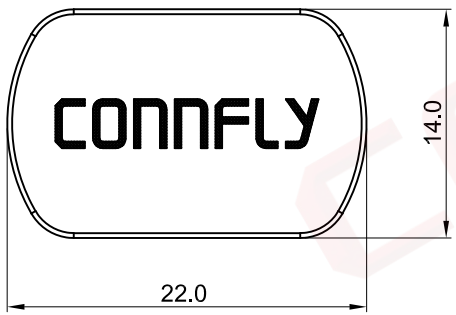

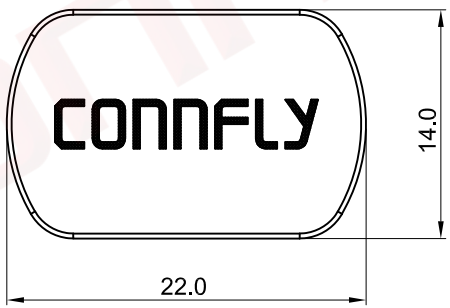

Notes:
Material:
1. Cap Material: Silicone rubber,Black or Blue.
Temperature: -40°C~+90°C.
Product Number Code:

B – DS1162-01 – X X 0 0 0

Cap color
B: Black
L: Blue

Contact type
P: Plug
S: Socket

GENERAL TOLERANCE		ANGLE TOLERANCE	
X.	±0.60	X.	±5°
.X	±0.38	.X	±3°
.XX	±0.25	.XX	±2°

DRAWING TYPE	CUSTOMER		
SCALE	1:1	SHEET	5 OF 5
DRAWING NO.	C-DS1162-01-XXXXX-B		

PROJECTION		TITLE	Anti-Dust Cap For MC4 Connector
UNITS	mm		
SHEET SIZE	A4	SERIES	DS1162-01 SERIES

晨翔电子有限公司
CONNFLY CONNFLY ELECTRONIC CO. LTD