Dept	Qty
DC	1
ED	1
IE	1
ISO	1
PD	1
R&D	1
SD	1
QA	1
QC	1
QE	1

The information provided herein is from CONNFLY Electronic Co., Ltd. and is confidential. Any disclosure to a party other than the recipient is prohibited. The intellectual properties and its rights contained herein, including but not limited to, trademarks, patents, copyrights, trade secrets, and technical know-how, are owned exclusively by CONNFLY or its affiliates. Unauthorized use or modification is strictly prohibited without prior written consent from CONNFLY. All intellectual properties provided herein are for reference purposes only and does not constitute authorization of its use in any format or manner. CONNFLY may enforce its intellectual property rights at its own discretion; failures or delays to exercise such rights does not constitute a waiver of such rights.

Female

REV.	DESCRIPTION	DRAWN	CHECKED	APPROVED
A	NEW RELEASE	WPY 10/16/24'		

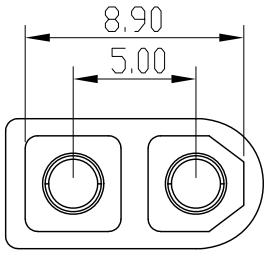

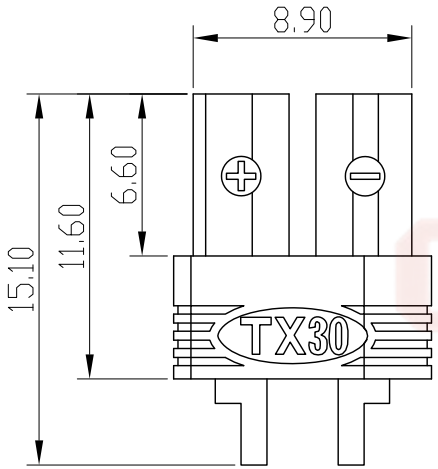

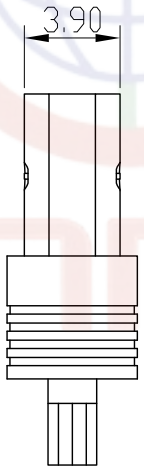

Notes:
1.Rated current: 15A
2.Voltage endurance: 500VDC
3.Contact resistance: 0.5mΩ
4.Insulation current: 2000MΩ
5.Instantaneous current: 30A
6.Environmental temperature: -20 ℃ -120 ℃
7.Mechanical lifespan: 1000 times
8.Recommended wire gauge: 18AWG

Materials:
1.Insulation Material: PA66
2.Metal material: Brass with gold plating
3.Protection level: IP40

Product Number Code：
DS1171-01-X X X X

- Housing color: Y:Yellow
- Contact Plating 8: Full gold flash
- Connector type: M:Male F:Female
- No.of Contacts 2:2

GENERAL TOLERANCE		ANGLE TOLERANCE	
X.	±0.60	X.	±5°
.X	±0.38	.X	±3°
.XX	±0.25	.XX	±2°

DRAWING TYPE	CUSTOMER		
SCALE	1:1	SHEET	1 OF 2
DRAWING NO.	C-DS1171-01-XXXX-A		

PROJECTION		TITLE	15A Solder-wire male and female connectors
UNITS	mm		
SHEET SIZE	A4	SERIES	DS1171-01 SERIES

晨翔电子有限公司
CONNFLY CONNFLY ELECTRONIC CO. LTD

Dept	Qty
DC	1
ED	1
IE	1
ISO	1
PD	1
R&D	1
SD	1
QA	1
QC	1
QE	1

The information provided herein is from CONNFLY Electronic Co., Ltd. and is confidential. Any disclosure to a party other than the recipient is prohibited. The intellectual properties and its rights contained herein, including but not limited to, trademarks, patents, copyrights, trade secrets, and technical know-how, are owned exclusively by CONNFLY or its affiliates. Unauthorized use or modification is strictly prohibited without prior written consent from CONNFLY. All intellectual properties provided herein are for reference purposes only and does not constitute authorization of its use in any format or manner. CONNFLY may enforce its intellectual property rights at its own discretion; failures or delays to exercise such rights does not constitute a waiver of such rights.

Male

REV.	DESCRIPTION	DRAWN	CHECKED	APPROVED
A	NEW RELEASE	WPY 10/16/24'		

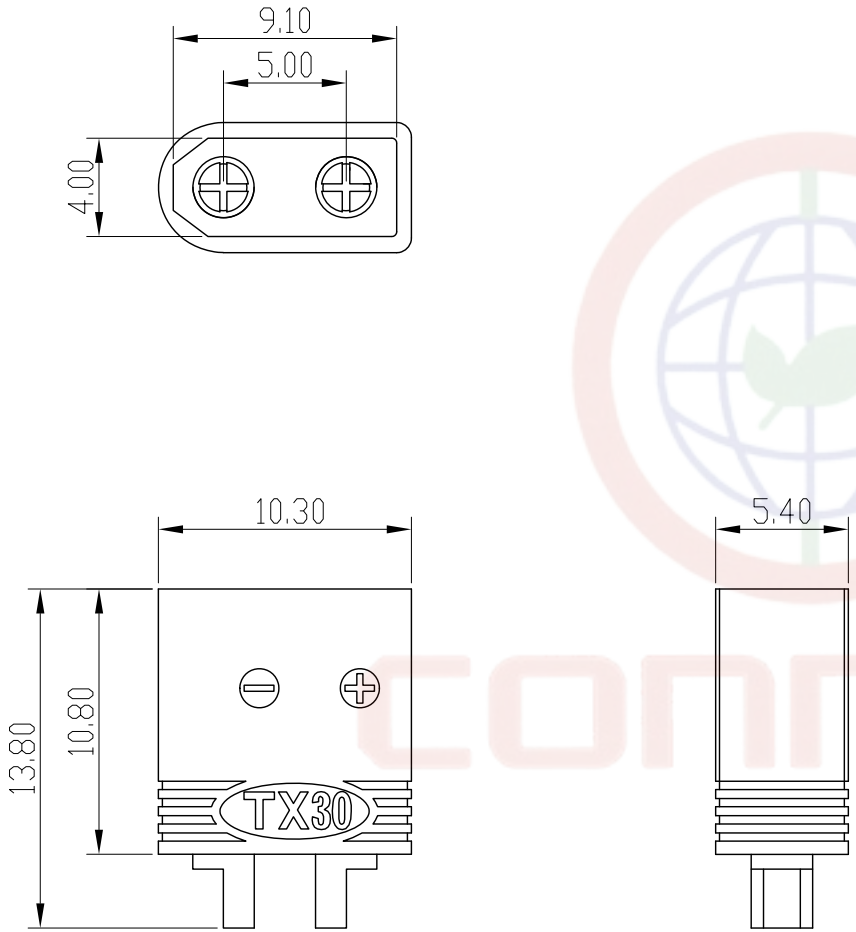

Notes:
1. Rated current: 15A
2. Voltage endurance: 500VDC
3. Contact resistance: 0.5mΩ
4. Insulation current: 2000MΩ
5. Instantaneous current: 30A
6. Environmental temperature: -20 ℃ -120 ℃
7. Mechanical lifespan: 1000 times
8. Recommended wire gauge: 18AWG

Materials:
1. Insulation Material: PA66
2. Metal material: Brass with gold plating
3. Protection level: IP40

Product Number Code:

DS1171-01-X X X X

- Housing color: Y:Yellow
- Contact Plating 8: Full gold flash
- Connector type: M:Male F:Female
- No.of Contacts 2:2

GENERAL TOLERANCE		ANGLE TOLERANCE	
X.	±0.60	X.	±5°
.X	±0.38	.X	±3°
.XX	±0.25	.XX	±2°

DRAWING TYPE	CUSTOMER		
SCALE	1:1	SHEET	2 OF 2
DRAWING NO.	C-DS1171-01-XXXX-A		

PROJECTION		TITLE	15A Solder-wire male and female connectors
UNITS	mm		
SHEET SIZE	A4	SERIES	DS1171-01 SERIES

晨翔电子有限公司
CONNFLY CONNFLY ELECTRONIC CO. LTD